Vertical Basket Strainers

VBS Super

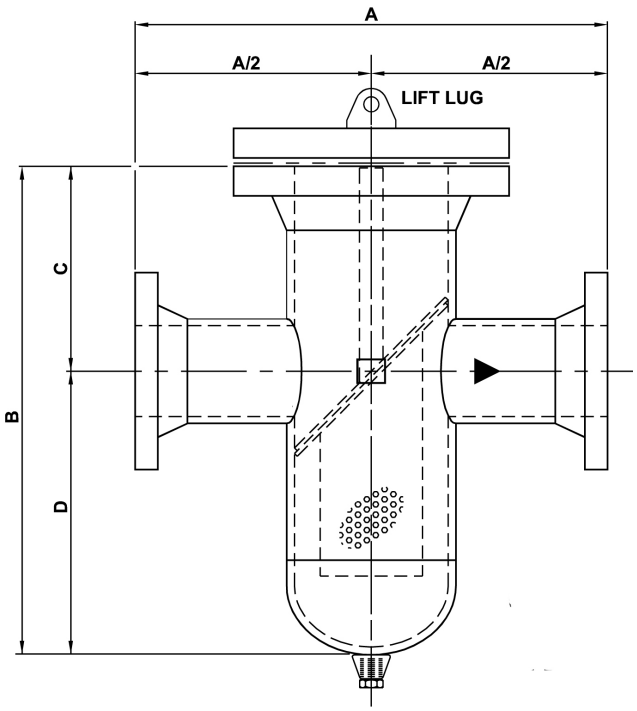

Dimensional Data										
Nozzle Size (NPS)	Vessel Size (NPS)	A	B	C	D	Open Area	Drain Size	Weights (lbs)		
								Class 150	Class 300	Class 600
2"	8"	22"	23"	9"	14"	2038%	0.75"	152	215	415
3"	8"	22"	23"	9"	14"	925%	0.75"	168	235	438
4"	10"	26"	29"	11"	18"	970%	0.75"	254	420	705
6"	12"	30"	34"	13"	21"	681%	0.75"	376	650	1045
8"	14"	36"	38"	15"	23"	515%	1.00"	518	885	1425
8"	16"	36"	39"	15"	24"	574%	1.00"	604	1025	1910
10"	18"	40"	47"	18"	29"	592%	1.00"	787	1265	2600
12"	20"	43"	49"	20"	29"	413%	2.00"	1030	2030	3350
14"	24"	48"	65"	22"	43"	711%	2.00"	1492	3120	5025
16"	24"	50"	65"	22"	43"	537%	2.00"	1534	3345	5450
18"	30"	58"	75"	24"	51"	607%	2.00"	2990	4950	8250
20"	30"	60"	75"	24"	51"	488%	2.00"	3125	5326	8780
24"	36"	70"	88"	32"	56"	432%	2.00"	4760	8550	12700